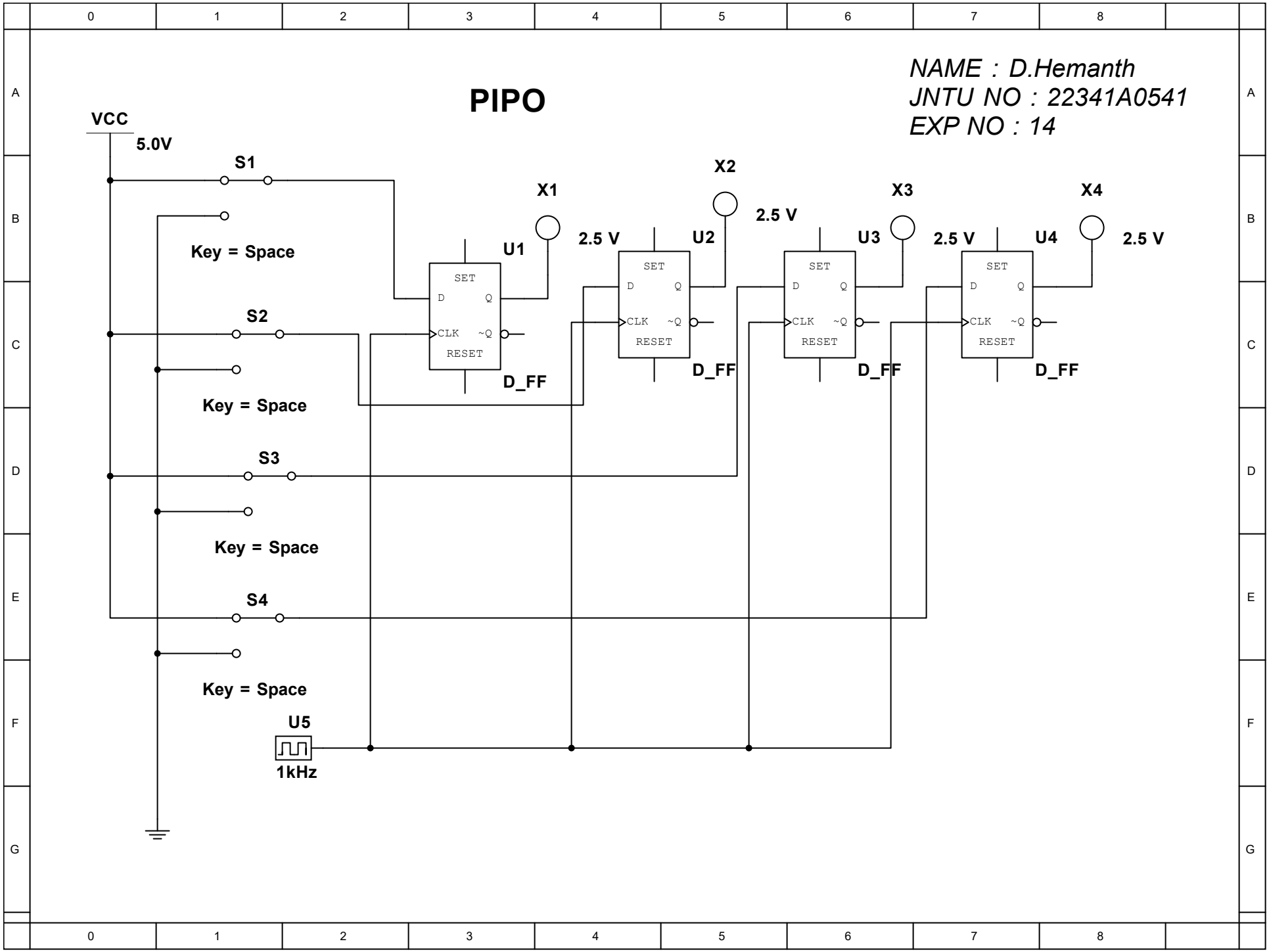
PIPO
NAME : D.Hemanth
JNTU NO : 22341A0541
EXP NO : 14
VCC
5.0V
S1
Key = Space
S2
Key = Space
S3
Key = Space
S4
Key = Space
U5
1kHz
X1
X2
X3
X4
2.5 V
2.5 V
2.5 V
2.5 V
U1
U2
U3
U4
SET
D
Q
CLK
~Q
RESET
D_FF
D_FF
D_FF
D_FF